Cambridge Assessment International Education

Cambridge International AS & A Level

PHYSICS **9702/11**

Paper 1 Multiple Choice **May/June 2024**

1 hour 15 minutes

You must answer on the multiple choice answer sheet.

You will need: Multiple choice answer sheet
Soft clean eraser
Soft pencil (type B or HB is recommended)

INSTRUCTIONS

- There are **forty** questions on this paper. Answer **all** questions.
- For each question there are four possible answers **A**, **B**, **C** and **D**. Choose the **one** you consider correct and record your choice in soft pencil on the multiple choice answer sheet.
- Follow the instructions on the multiple choice answer sheet.
- Write in soft pencil.
- Write your name, centre number and candidate number on the multiple choice answer sheet in the spaces provided unless this has been done for you.
- Do **not** use correction fluid.
- Do **not** write on any bar codes.
- You may use a calculator.

INFORMATION

- The total mark for this paper is 40.
- Each correct answer will score one mark.
- Any rough working should be done on this question paper.

IB24 06_9702_11/2RP
© UCLES 2024

[Turn over

Data

acceleration of free fall	$g = 9.81\,\text{m s}^{-2}$
speed of light in free space	$c = 3.00 \times 10^{8}\,\text{m s}^{-1}$
elementary charge	$e = 1.60 \times 10^{-19}\,\text{C}$
unified atomic mass unit	$1\,\text{u} = 1.66 \times 10^{-27}\,\text{kg}$
rest mass of proton	$m_\text{p} = 1.67 \times 10^{-27}\,\text{kg}$
rest mass of electron	$m_\text{e} = 9.11 \times 10^{-31}\,\text{kg}$
Avogadro constant	$N_\text{A} = 6.02 \times 10^{23}\,\text{mol}^{-1}$
molar gas constant	$R = 8.31\,\text{J K}^{-1}\,\text{mol}^{-1}$
Boltzmann constant	$k = 1.38 \times 10^{-23}\,\text{J K}^{-1}$
gravitational constant	$G = 6.67 \times 10^{-11}\,\text{N m}^2\,\text{kg}^{-2}$
permittivity of free space	$\varepsilon_0 = 8.85 \times 10^{-12}\,\text{F m}^{-1}$ $\left(\frac{1}{4\pi\varepsilon_0} = 8.99 \times 10^{9}\,\text{m F}^{-1}\right)$
Planck constant	$h = 6.63 \times 10^{-34}\,\text{J s}$
Stefan–Boltzmann constant	$\sigma = 5.67 \times 10^{-8}\,\text{W m}^{-2}\,\text{K}^{-4}$

Formulae

uniformly accelerated motion	$s = ut + \frac{1}{2}at^2$ $v^2 = u^2 + 2as$
hydrostatic pressure	$\Delta p = \rho g \Delta h$
upthrust	$F = \rho g V$
Doppler effect for sound waves	$f_\text{o} = \frac{f_\text{s} v}{v \pm v_\text{s}}$
electric current	$I = Anvq$
resistors in series	$R = R_1 + R_2 + \ldots$
resistors in parallel	$\frac{1}{R} = \frac{1}{R_1} + \frac{1}{R_2} + \ldots$

© UCLES 2024

1 Which unit is an SI base unit?

A ampere

B coulomb

C degree Celsius

D gram

2 Which of the following could have the same units as force?

A $\frac{\text{energy}}{\text{distance}}$

B $\frac{\text{energy}}{\text{time}}$

C momentum × distance

D momentum × time

3 The velocity of an object changes from an initial velocity u to a final velocity v. The vectors represent these velocities.

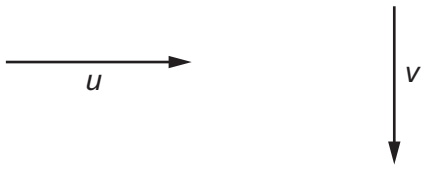

Which single vector represents the change in velocity of the object?

A



B



C

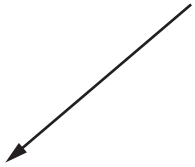

D

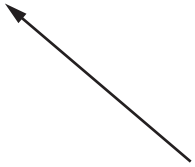

4 An object is moving with initial velocity u. The object then moves with uniform acceleration a for time t until it reaches final velocity v.

Which equation describes the motion of the object?

A $u = v - 2at$ **B** $u = v - at$ **C** $v = u + at^2$ **D** $v = u + 2at^2$

© UCLES 2024

5 Which calculation produces a vector quantity?

A current × time

B final displacement – initial displacement

C $\frac{\text{work done}}{\text{time}}$

D $\frac{1}{2} \times \text{mass} \times (\text{speed})^2$

6 A thermometer can be read to an accuracy of ± 0.5 °C. This thermometer is used to measure a temperature rise from 40 °C to 100 °C.

What is the percentage uncertainty in the measurement of the temperature rise?

A 0.5% **B** 0.8% **C** 1.3% **D** 1.7%

7 The diagram shows the path of a golf ball.

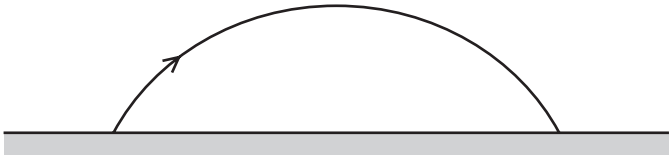

Which row describes changes in the horizontal and vertical components of the golf ball's velocity when air resistance is ignored?

	horizontal	vertical
A	constant deceleration	constant acceleration downwards
B	constant deceleration	acceleration decreases upwards then increases downwards
C	constant velocity	constant acceleration downwards
D	constant velocity	acceleration decreases upwards then increases downwards

8 An aircraft flies from London to Sydney in a time of 21 hours 40 minutes.

The distance travelled is 17 000 km.

What is the average speed of the aircraft?

A $2.2\,\text{m}\,\text{s}^{-1}$

B $2.2 \times 10^{7}\,\mu\text{m}\,\text{s}^{-1}$

C $2.2 \times 10^{11}\,\text{nm}\,\text{s}^{-1}$

D $2.2 \times 10^{6}\,\text{mm}\,\text{s}^{-1}$

© UCLES 2024

9 A golf club hits a golf ball. The graph shows how the force F on the ball varies with time t.

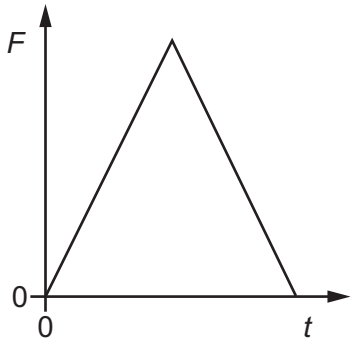

Which graph shows how the velocity v of the ball varies with time t?

A

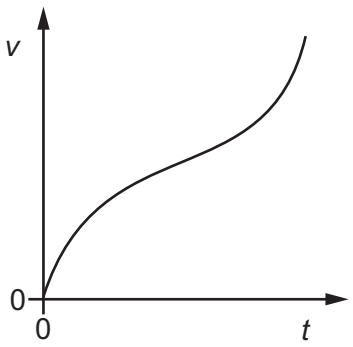

B

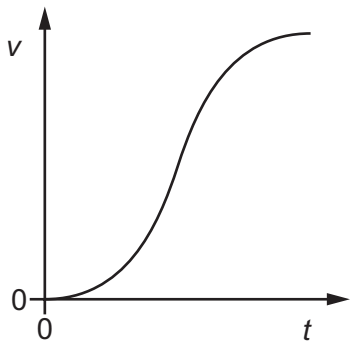

C

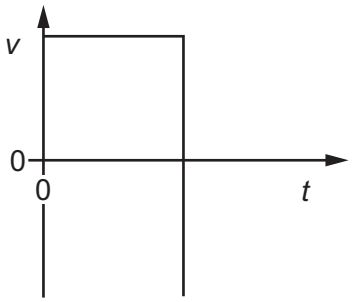

D

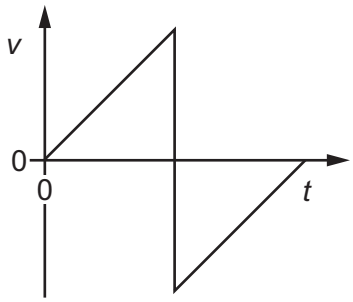

10 What is meant by the mass and by the weight of an object on the Earth?

	mass	weight
A	its momentum divided by its velocity	the work done in lifting it one metre
B	the gravitational force on it	the property that resists its acceleration
C	the pull of the Earth on it	its mass divided by the acceleration of free fall
D	the property that resists its acceleration	the pull of the Earth on it

© UCLES 2024

11 A thin horizontal plate of area $0.036\,m^2$ is beneath the surface of a liquid of density $930\,kg\,m^{-3}$. The force on one side of the plate due to the pressure of the liquid is 290 N.

What is the depth of the plate beneath the surface of the liquid?

A 0.88 m **B** 1.1 m **C** 1.8 m **D** 8.7 m

12 Spheres X and Y form an isolated system. The mass of Y is greater than the mass of X.

Sphere Y is initially stationary.

Sphere X collides elastically with sphere Y.

The speed of sphere X before the collision is u.

Which statement **must** be correct?

A Sphere X rebounds with a speed that is greater than u, and sphere Y moves off with a speed that is less than u.

B Sphere X rebounds with a speed that is less than u, and sphere Y moves off with a speed that is also less than u.

C Sphere X rebounds with speed u, and sphere Y remains stationary.

D Sphere X remains stationary, and sphere Y moves off with a speed that is less than u.

13 A ball of mass 0.10 kg is thrown towards a stationary vertical bat. The ball hits the bat with a horizontal velocity of $20\,m\,s^{-1}$.

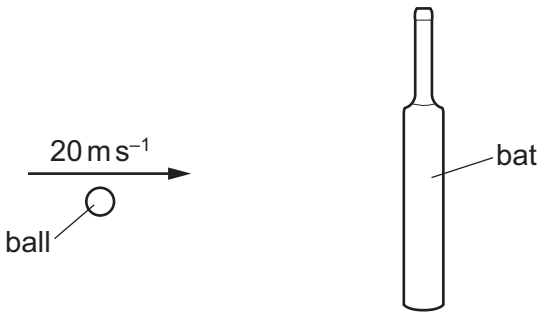

The ball rebounds and leaves the bat with a horizontal velocity of $15\,m\,s^{-1}$.

What is the change in momentum of the ball?

A 0.20 N s **B** 0.50 N s **C** 1.5 N s **D** 3.5 N s

© UCLES 2024

14 An isolated object of negligible weight is acted on by two coplanar forces of the same magnitude.

In which diagram is the object in equilibrium?

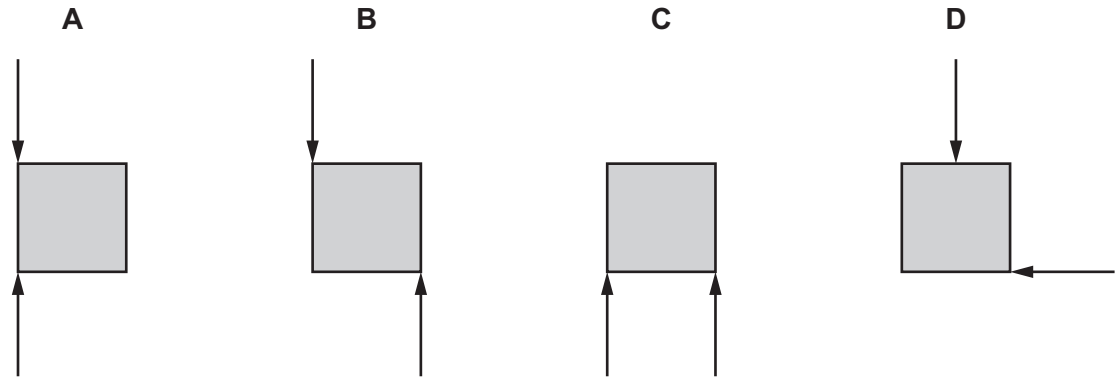

15 A uniform beam PQ rests horizontally on a support at point S.

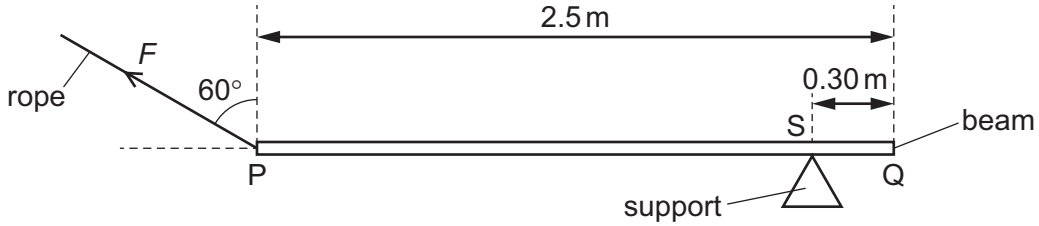

A rope is attached at one end of the beam. The rope is at an angle of 60° to the vertical and exerts a force F, in newtons, on the beam.

What is the moment, in N m, of the force F about the point S?

A $1.1F$ **B** $1.3F$ **C** $1.9F$ **D** $2.2F$

16 The diagram shows the dimensions of an elastic cord used to project a stone. The tension in the cord is T when the cord is pulled into the shape shown.

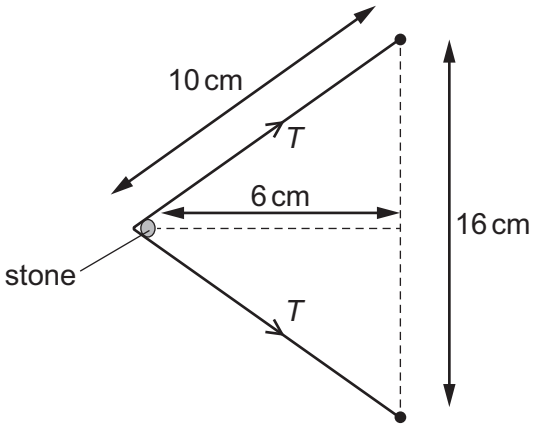

Which force does the elastic cord exert on the stone?

A $\frac{3}{5}T$ **B** $\frac{6}{5}T$ **C** $\frac{8}{5}T$ **D** $2T$

© UCLES 2024

17 A box of weight 40 N is pushed with a horizontal force of 20 N along level ground for a distance of 2.4 m.

The box is then lifted at constant velocity through a height of 1.6 m by a vertical force.

What is the total work done on the box by the two forces?

A 80 J **B** 110 J **C** 120 J **D** 160 J

18 Which statement about efficiency is correct?

A Efficiency does **not** have a unit.

B The joule is a unit of efficiency.

C The metre is a unit of efficiency.

D The watt is a unit of efficiency.

19 A plane wave of amplitude A is incident on a surface of area S placed so that it is perpendicular to the direction of travel of the wave. The energy per unit time reaching the surface is E.

The amplitude of the wave is increased to $2A$ and the area of the surface is reduced to $\frac{1}{2}S$.

How much energy per unit time reaches this smaller surface?

A $4E$ **B** $2E$ **C** E **D** $\frac{1}{2}E$

© UCLES 2024

20 A steel ball is falling at constant speed in oil.

Which graph shows the variation with time of the gravitational potential energy E_p and the kinetic energy E_k of the ball?

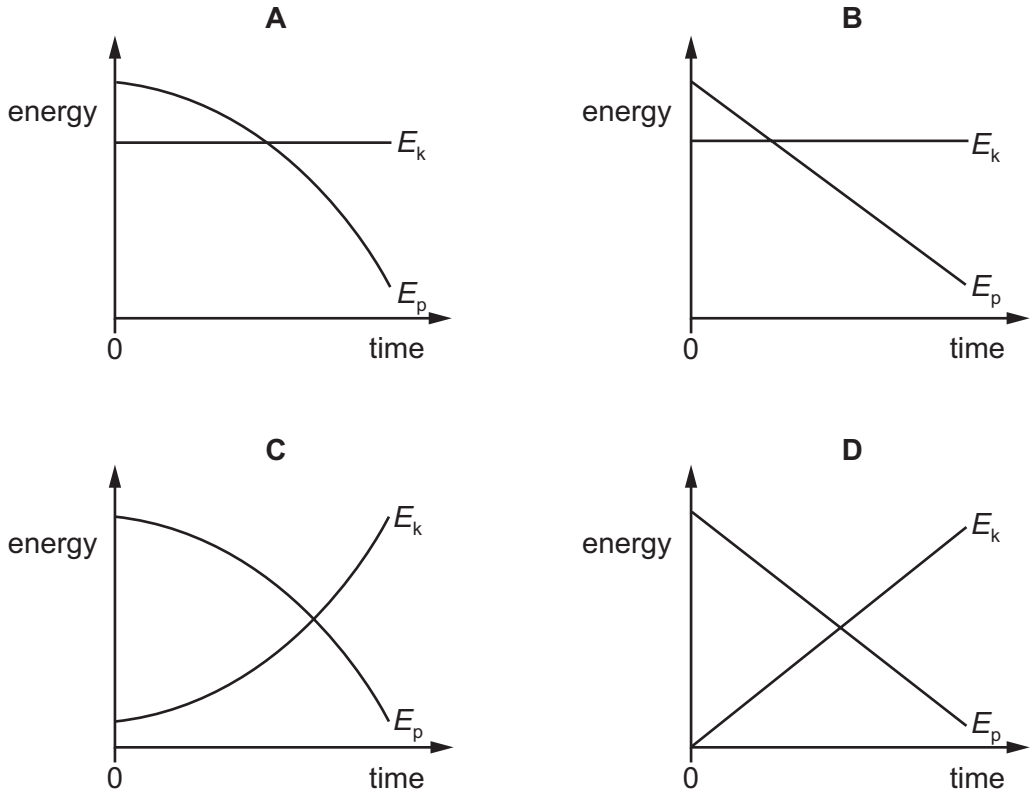

21 When a force of 0.80 N is applied to a spring, the length of the spring is 90 mm.

When a force of 1.30 N is applied to the same spring, its length is 115 mm.

The spring obeys Hooke's law.

What is the spring constant of the spring?

A $8.9\,\text{N m}^{-1}$ **B** $10\,\text{N m}^{-1}$ **C** $11\,\text{N m}^{-1}$ **D** $20\,\text{N m}^{-1}$

© UCLES 2024

22 An experiment is carried out using a metal wire to investigate how it responds to a varying tensile force. The cross-sectional area of the wire is constant.

Which graph has a gradient that is equal to the Young modulus of the metal?

A

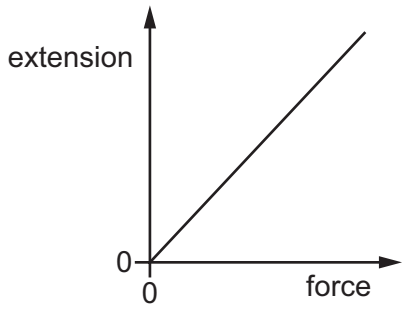

B

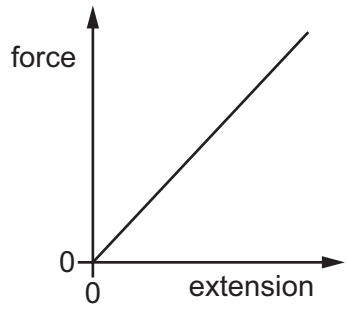

C

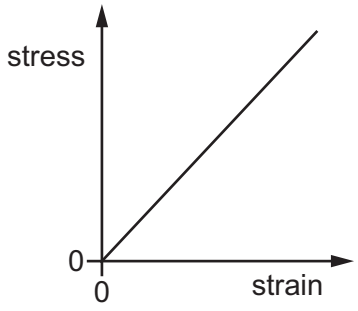

D

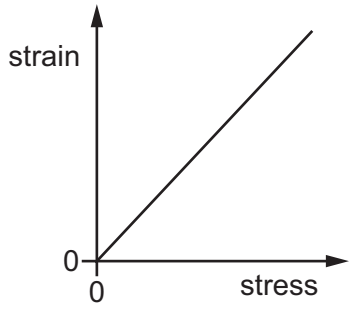

23 For a wire, Hooke's law is obeyed for a tension F and extension x. The Young modulus for the material of the wire is E.

Which expression represents the elastic potential energy stored in the wire?

A $\frac{1}{2}Ex$ **B** Ex **C** $\frac{1}{2}Fx$ **D** Fx

24 A plane polarised wave has amplitude A. The wave is incident normally on a polarising filter.

The transmission axis of the filter is at angle θ to the plane of polarisation of the incident wave.

What is the amplitude of the wave that emerges from the filter?

A $A\cos\theta$ **B** $A\cos^2\theta$ **C** $A^2\cos\theta$ **D** $A^2\cos^2\theta$

© UCLES 2024

25 An electromagnetic wave is travelling through a vacuum.

What could be the wavelength and period of the electromagnetic wave?

	wavelength	period
A	1.2×10^{-10} Tm	2.5 Ms
B	1.2 pm	2.5×10^{11} Gs
C	1.2×10^{2} pm	4.0×10^{-10} ns
D	1.2×10^{3} μm	4.0 ns

26 Light of frequency 6.7×10^{14} Hz in a vacuum is incident normally on a diffraction grating that contains 4.0×10^{5} lines m^{-1}.

What is the angle between the adjacent second and third order intensity maxima?

A 12° **B** 21° **C** 33° **D** 54°

27 The siren of a moving police car emits a sound wave with a frequency of 440 Hz. A stationary observer hears sound of frequency 494 Hz. The speed of sound in the air is 340 $m\,s^{-1}$.

What could be the speed and the direction of movement of the car?

A 37 $m\,s^{-1}$ directly away from the observer

B 37 $m\,s^{-1}$ directly towards the observer

C 42 $m\,s^{-1}$ directly away from the observer

D 42 $m\,s^{-1}$ directly towards the observer

28 The diagram shows the shape at one instant in time of part of a stretched string as a wave travels along it from left to right.



What are the directions of the velocities of the points 1, 2 and 3 on the string at this instant in time?

	point 1	point 2	point 3
A	→	→	→
B	→	←	→
C	↑	↓	↑
D	↓	↑	↓

© UCLES 2024

29 Which wave **cannot** be a longitudinal wave?

A a diffracted wave

B a polarised wave

C a reflected wave

D a stationary wave

30 Microwaves are emitted from two sources at points X and Y. The two waves meet at point Z. The diagram shows the paths of the two waves.

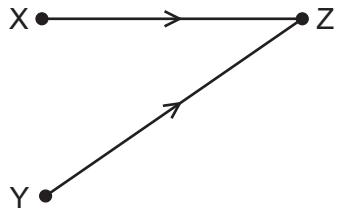

The waves emitted from points X and Y are coherent.

What is a direct consequence of the two waves being coherent?

A There is a constant difference in the path lengths YZ and XZ.

B There is a constant difference in phase between the two waves at Z.

C There is a constant non-zero difference in frequency of the two waves at Z.

D There is a constant non-zero difference in amplitude of the two waves at Z.

31 What is the unit of resistivity?

A $\Omega\,m^{-2}$ **B** $\Omega\,m^{-1}$ **C** Ω **D** $\Omega\,m$

32 A kettle is connected to a 250 V mains supply.

What are possible values for the power of the kettle and the current in the kettle?

	power / W	current / A
A	500	0.5
B	500	5.0
C	2500	0.1
D	2500	10

© UCLES 2024

33 Which circuit results in output voltage V_{out} increasing with increasing temperature?

A

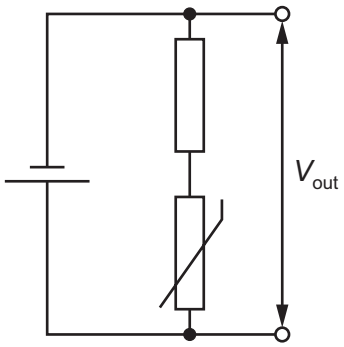

B

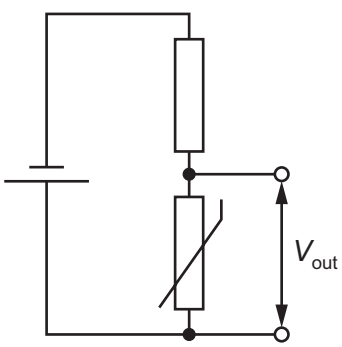

C

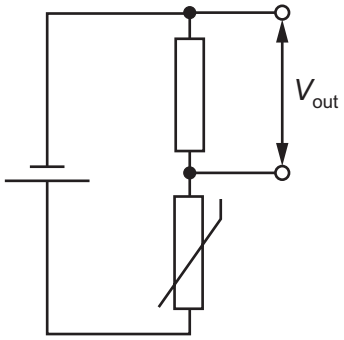

D

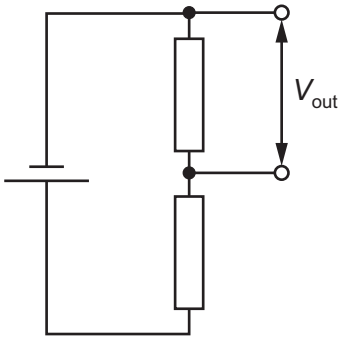

34 Four resistors, each of resistance R, are connected as shown.

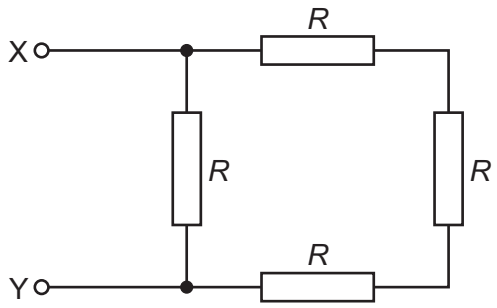

The total resistance between point X and point Y is 120 Ω.

What is the magnitude of the resistance R?

A 30 Ω **B** 90 Ω **C** 160 Ω **D** 480 Ω

35 A cell with internal resistance is connected to a variable resistor R as shown.

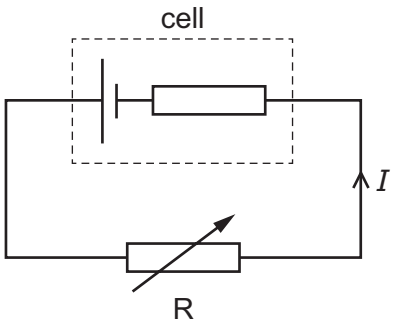

The resistance of R is gradually decreased.

How do the current I and the terminal potential difference (p.d.) across the cell change?

	current I	terminal p.d. across cell
A	decreases	decreases
B	decreases	increases
C	increases	decreases
D	increases	increases

36 The diagram shows a circuit with a cell and three resistors with resistances R_1, R_2 and R_3.

The cell has negligible internal resistance.

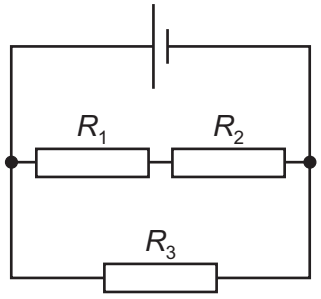

The total resistance of the circuit is R_T.

Which equation for R_T is correct?

A $R_T = R_1 + R_2 + R_3$

B $R_T = \frac{1}{R_1 + R_2} + \frac{1}{R_3}$

C $\frac{1}{R_T} = \frac{1}{R_1 + R_2 + R_3}$

D $\frac{1}{R_T} = \frac{1}{R_1 + R_2} + \frac{1}{R_3}$

© UCLES 2024

37 Hydrogen and deuterium can be represented by the nuclide symbols ${}^{1}_{1}\mathrm{H}$ and ${}^{2}_{1}\mathrm{H}$ respectively.

What is a difference between hydrogen and deuterium?

A The deuterium atom has twice the number of electrons as the hydrogen atom.

B The deuterium nucleus has a charge, but the hydrogen nucleus has no charge.

C The deuterium nucleus has less mass than the hydrogen nucleus.

D The deuterium nucleus has half the charge per unit mass of the hydrogen nucleus.

38 A radioactive sample decays by emitting β^- particles.

The energy released in the decay process is the same for each nucleus that decays, but the β^- particles emitted have a continuous range of kinetic energies.

Which statement explains why the β^- particles are emitted with a continuous range of kinetic energies?

A Some of the energy released is given to the remaining nucleons in the nucleus.

B Some of the energy released is taken by an emitted antineutrino.

C Some of the energy released is used to create the β^- particle.

D Some of the energy released is used to create a new nucleon.

39 Which particle is **not** a fundamental particle?

A electron

B neutrino

C neutron

D top quark

40 What is the charge of an anti-top quark?

A $-\frac{2}{3}e$ **B** $-\frac{1}{3}e$ **C** $+\frac{1}{3}e$ **D** $+\frac{2}{3}e$

© UCLES 2024

BLANK PAGE

Permission to reproduce items where third-party owned material protected by copyright is included has been sought and cleared where possible. Every reasonable effort has been made by the publisher (UCLES) to trace copyright holders, but if any items requiring clearance have unwittingly been included, the publisher will be pleased to make amends at the earliest possible opportunity.

To avoid the issue of disclosure of answer-related information to candidates, all copyright acknowledgements are reproduced online in the Cambridge Assessment International Education Copyright Acknowledgements Booklet. This is produced for each series of examinations and is freely available to download at www.cambridgeinternational.org after the live examination series.

Cambridge Assessment International Education is part of Cambridge Assessment. Cambridge Assessment is the brand name of the University of Cambridge Local Examinations Syndicate (UCLES), which is a department of the University of Cambridge.

© UCLES 2024